Feuille de compétition / Competition Sheet

U15 European Championship

Style: GR 85

QUALIFICATION					1/8 FINALE					1/4 FINALE					1/2 FINALE					FINALE					WINNER
1		Alessandro Pucher (ITA)	P1	P2	1	0 / 0	ITA	P1	P2	2	4 / 12	BLR	P1	P2	2	1 / 3	BLR	P1	P2	7	1 / 1	HUN	P1	P2	22 Nikita Maniukhin (RUS)
			P1	P2				0	0				7	5				1	2				0	1	
2		Daniil Kazlou (BLR)	P1	P2	2	4 / 8	BLR	P1	P2	3	0 / 0	POL	P1	P2	7	3 / 3	HUN	P1	P2	22	3 / 3	RUS	P1	P2	
			P1	P2				8	0				0	0				0	3				3	0	
3		Łukasz Kłopotowski (POL)	P1	P2	3	5 / 7	POL	P1	P2	5	0 / 0	ROU	P1	P2	15	1 / 2	RUS	P1	P2						
			P1	P2				0	7				0	0				2	0						
4		Saba Bolkvadze (GEO)	P1	P2	4	0 / 3	GEO	P1	P2	7	5 / 4	HUN	P1	P2	13	1 / 1	UKR	P1	P2						
			P1	P2				3	0				4	0				0	1						
5		Antonio Pascu (ROU)	P1	P2	5	5 / 8	ROU	P1	P2	13	1 / 1	UKR	P1	P2	15	3 / 6	RUS	P1	P2						
			P1	P2				4	4				0	1				3	3						
6		Pironkov Hristomir (BUL)	P1	P2	6	0 / 2	BUL	P1	P2	15	4 / 8	RUS	P1	P2	22	3 / 3	RUS	P1	P2						
			P1	P2				2	0				8	0				0	3						
7		Borosi Henrik (HUN)	P1	P2	7	5 / 4	HUN	P1	P2	16	0 / 0	EST	P1	P2											
			P1	P2				4	0				0	0											
8	5 / 6	Harutyun Kirakosyan (ARM)	P1	P2	8	0 / 2	ARM	P1	P2	18	0 / 0	GEO	P1	P2											
			6	0				2	0				0	0											
9	0 / 2	Max Molochnikov (ISR)	P1	P2						20	0 / 0	UKR	P1	P2											
			2	0									0	0											
10	5 / 8	Tommaso Virgilii (ITA)	P1	P2	10	1 / 4	ITA	P1	P2	20	4 / 8	UKR	P1	P2											
			8	0				4	0				8	0											
11	0 / 2	Laszlo Szerencses (SVK)	P1	P2	11	0 / 2	SVK	P1	P2	22	5 / 4	RUS	P1	P2											
			2	0				2	0				4	0											
12	1 / 2	Andrija Lubarda (SRB)	P1	P2	12	1 / 2	SRB	P1	P2	22	4 / 9	RUS	P1	P2											
			2	0				0	2				9	0											
13	4 / 10	Ivan Solodukha (UKR)	P1	P2	13	3 / 5	UKR	P1	P2	24	0 / 1	TUR	P1	P2											
			10	0				1	4				1	0											
14	0 / 0	Rafail Gkirnis (GRE)	P1	P2	14	0 / 0	GRE	P1	P2	24	0 / 1	TUR	P1	P2											
			0	0				0	0				1	0											
15	4 / 8	Timur Chernyshev (RUS)	P1	P2	15	4 / 8	RUS	P1	P2																
			8	0				8	0																
16	3 / 6	Rasmus Liisma (EST)	P1	P2	16	0 / 0	EST	P1	P2																
			2	4				0	0																
17	1 / 2	David Molnar (SRB)	P1	P2	17	1 / 2	SRB	P1	P2																
			0	2				2	0																
18	3 / 11	Irakli Maisuradze (GEO)	P1	P2	18	0 / 0	GEO	P1	P2																
			2	9				0	0																
19	1 / 7	Bogdan Flancea (ROU)	P1	P2	19	1 / 7	ROU	P1	P2																
			4	3				4	0																
20	4 / 10	Vladyslav Lub (UKR)	P1	P2	20	4 / 8	UKR	P1	P2																
			5	5				8	0																
21	0 / 0	Karol Staniewicz (POL)	P1	P2	21	0 / 0	POL	P1	P2																
			0	0				0	0																
22	4 / 9	Nikita Maniukhin (RUS)	P1	P2	22	5 / 4	RUS	P1	P2																
			9	0				4	0																
23	0 / 0	Maksim Masiukevich (BLR)	P1	P2	23	0 / 0	BLR	P1	P2																
			0	0				0	0																
24	4 / 8	Nurşat Taşci (TUR)	P1	P2	24	0 / 1	TUR	P1	P2																
			8	0				1	0																
25	0 / 0	Jermakov Nikita (LTU)	P1	P2	25	0 / 0	LTU	P1	P2																
			0	0				0	0																

Feuille de compétition / Competition Sheet

U15 European Championship

Style: GR 85

"REPECHAGE"

"UPPER BRANCH"

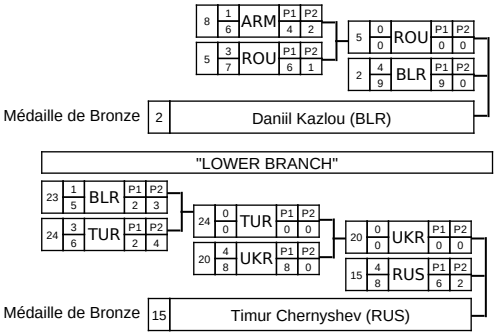

"LOWER BRANCH"

Classement

Cl	Pays	Nom
1	RUS	Nikita Maniukhin (RUS)
2	HUN	Borosi Henrik (HUN)
3	BLR	Daniil Kazlou (BLR)
3	RUS	Timur Chernyshev (RUS)
5	ROU	Antonio Pascu (ROU)
5	UKR	Vladyslav Lub (UKR)
7	UKR	Ivan Solodukha (UKR)
8	TUR	Nurşat Taşci (TUR)
9	ARM	Harutyun Kirakosyan (ARM)
10	ITA	Tommaso Virgilii (ITA)
11	POL	Łukasz Kłopotowski (POL)
12	GEO	Irakli Maisuradze (GEO)
13	EST	Rasmus Liisma (EST)
14	ROU	Bogdan Flancea (ROU)
15	BLR	Maksim Masiukevich (BLR)
16	SRB	David Molnar (SRB)
17	SRB	Andrija Lubarda (SRB)
18	GEO	Saba Bolkvadze (GEO)
19	ISR	Max Molochnikov (ISR)
20-21	SVK	Laszlo Szerencses (SVK)
20-21	BUL	Pironkov Hristomir (BUL)
22-24	LTU	Jermakov Nikita (LTU)
22-24	ITA	Alessandro Pucher (ITA)
22-24	GRE	Rafail Gkirnis (GRE)
25	POL	Karol Staniewicz (POL)